Lab 06: A Need for Speed Control

ECE 484: Embedded Systems Design

Grade	Score	Signature
Attendance: James Nippa		
Attendance: Gabe Litteken		
Attendance:		
Demonstration	10	

Overview

In this lab, you will design an embedded system that will control the speed of a DC motor using a quadrature encoder. The quadrature encoder will control the duty cycle of a PWM wave that is connected to the driver circuitry of the DC motor. For debugging and demonstration purposes, the system will use I2C/TWI to display the current duty cycle on an LCD screen.

Deliverables

1. System Demonstration (10 points)
2. Completed Worksheet submitted to Canvas (5 points)
3. Commented Source Code submitted to Canvas (5 points)

Instructions

Your embedded system will consist of the following hardware components:

1. A quadrature encoder with 10kΩ pull-up resistors on channel A and channel B.
2. A unidirectional DC motor driver circuit consisting of the 9V battery; the external power supply; an N-channel MOSFET with a 1kΩ gate resistance; a flyback diode (provided by Dr. Swanson); and a DC motor with the fan blade attachment. To keep the stall current of the motor below the maximum drain current of the MOSFET (270mA), you will need to use the 3.3V rail provided by the power supply.
3. An LCD screen connected to a I2C/TWI module (provided by Dr. Swanson).
4. Pull-up resistors (1kΩ-10kΩ) connected to the SCL and SDA lines of your microcontroller and I2C/TWI module.

Starter code for this lab is provided in the assignment page on Canvas. For the software, you will first configure Timer 0 to operate in non-inverted Fast PWM mode where OCR0A will be used to set the period of the PWM wave and OCR0B will be used to set the duty cycle of the PWM wave. The OCR0A value should be calculated to generate a PWM wave with a frequency of 1kHz. OCR0B will be initialized to 0 and will be adjusted in the Timer 1 ISR.

You will use Timer 1 in CTC mode to trigger an interrupt that will sample the two encoder

channels every 10μs. Similar to your previous labs, you will debounce the encoder channels; use the debounced encoder states to determine the encoder direction; and increment/decrement the `encoderCount` variable. The `encoderCount` variable will be used to adjust the duty cycle of the PWM generated by Timer 0. You will need to make sure that `encoderCount` does not exceed your calculated OCR0A value and does not drop below 0. Finally, you will use time multiplexing within the Timer 1 ISR to output the duty cycle of the PWM wave to the LCD screen every 10ms. Your LCD screen should read "DUTY CYCLE: XYZ%" on the first line, where XYZ represents the duty cycle (in percent).

Once you have obtained a functional system, make sure to increment the duty cycle of the PWM wave and record the duty cycle at which the motor begins to spin. Use your recorded value to answer Question 1 at the end of the lab manual.

Demonstration Rubric

Please demonstrate your system to Dr. Swanson or the TA and they will record your demonstration score at the top of your lab manual. Checkpoint scores are provided in the following rubric. Scores between checkpoints may be awarded if a student has exceeded the previous checkpoint but has not reached the next checkpoint(s).

Score	Reasoning
10.0	Student can debounce quadrature encoder channels and use `encoderCount` to adjust the duty cycle of the PWM wave. The current duty cycle is properly displayed on the LCD.
8.0	Student can debounce quadrature encoder channels and use `encoderCount` to adjust the duty cycle of the PWM wave. The current duty cycle is not displayed on the LCD.
6.0	Student can debounce quadrature encoder channels and display the values of the channels on LEDs. The LCD can display a static message and the PWM wave is set to a constant duty cycle.
4.0	Student can debounce quadrature encoder channels and display the values of the channels on LEDs.
2.0	Student has wired their quadrature encoder properly and can read the channel A and B signals using an oscilloscope.
0.0	Student cannot program their microcontroller and has not installed microchip studio.

Demonstration Rubric

Please demonstrate your system to Dr. Swanson or the TA and they will record your demonstration score at the top of your lab manual. Checkpoint scores are provided in the following rubric. Scores between checkpoints may be awarded if a student has exceeded the previous checkpoint but has not reached the next checkpoint(s).

Score	Reasoning
10.0	Student can debounce quadrature encoder channels and use `encoderCount` to adjust the duty cycle of the PWM wave. The current duty cycle is properly displayed on the LCD.
8.0	Student can debounce quadrature encoder channels and use `encoderCount` to adjust the duty cycle of the PWM wave. The current duty cycle is not displayed on the LCD.
6.0	Student can debounce quadrature encoder channels and display the values of the channels on LEDs. The LCD can display a static message and the PWM wave is set to a constant duty cycle.
4.0	Student can debounce quadrature encoder channels and display the values of the channels on LEDs.
2.0	Student has wired their quadrature encoder properly and can read the channel A and B signals using an oscilloscope.
0.0	Student cannot program their microcontroller and has not installed microchip studio.

Circuit Diagram

Draw a circuit diagram for your system. Make sure to label all major modules, resistance values, and signal lines.

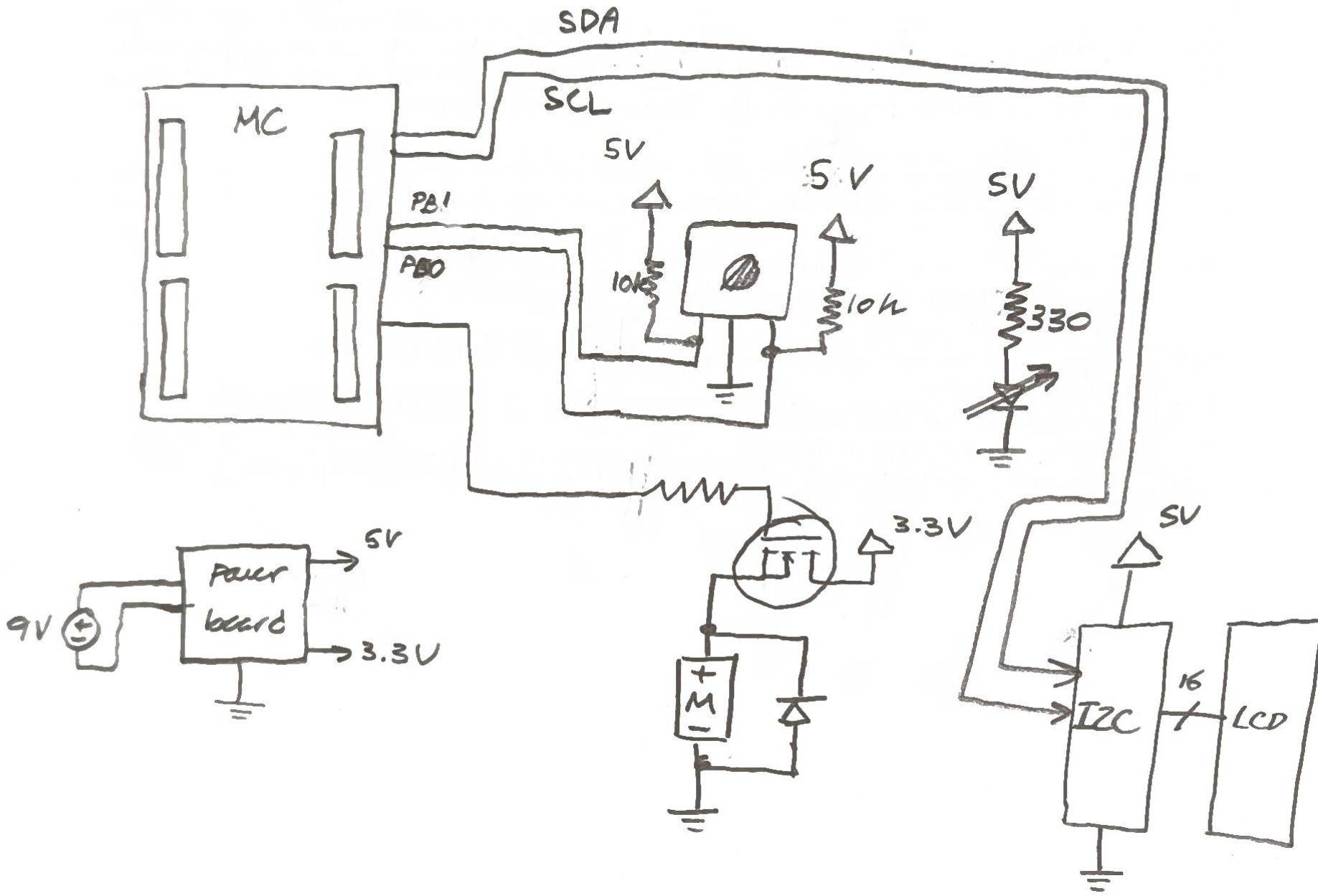

Circuit Diagram

Draw a circuit diagram for your system. Make sure to label all major modules, resistance values, and signal lines.

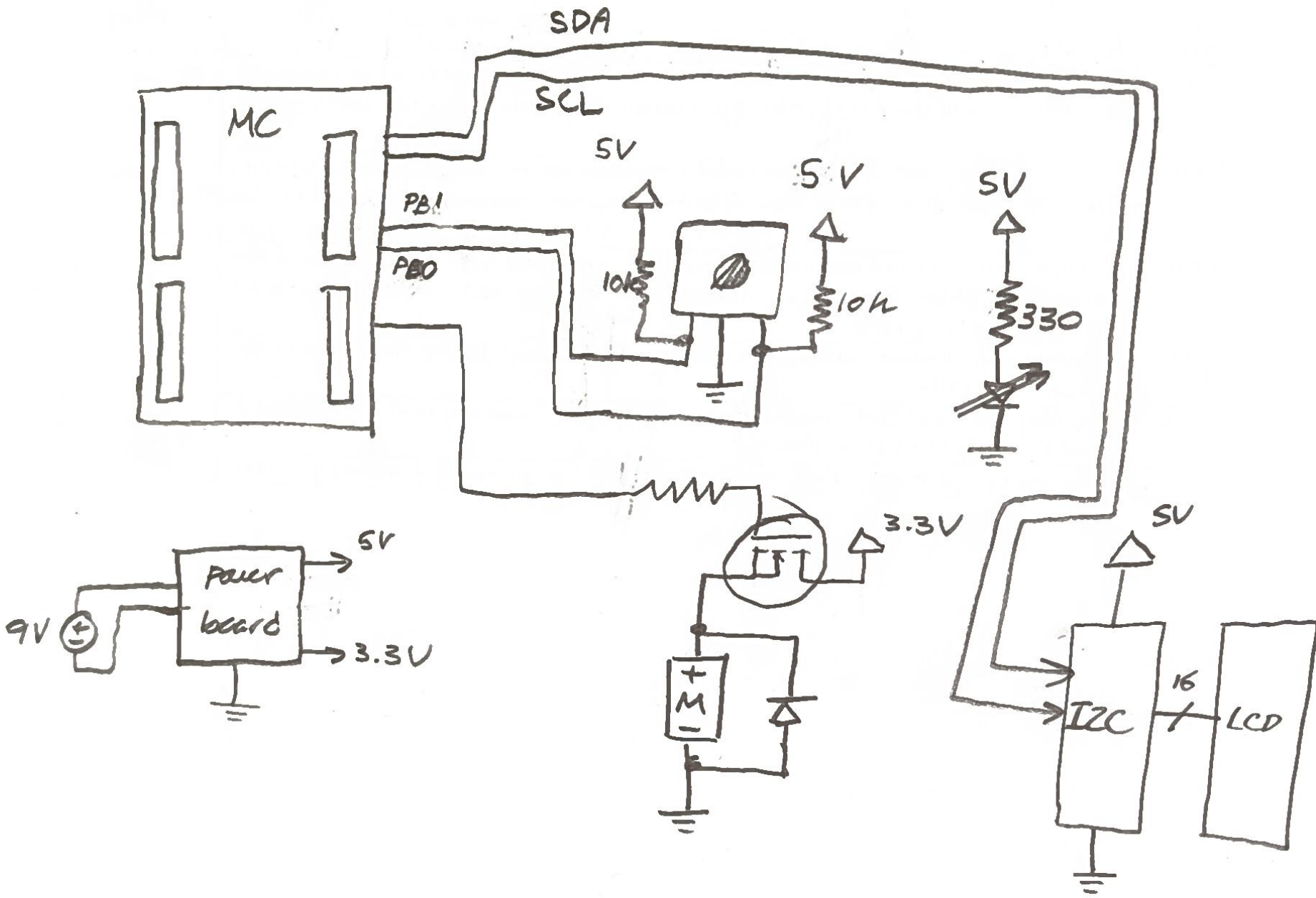

Design Questions

1. At what duty cycle did the motor turn on? What average voltage does this equate to?

roughly 40%

This equates to 3.3V · 0.4 = $\boxed{1.32 \text{ volts}}$

2. Explain the difference between configuring Timer 0 in Fast PWM mode 3 and Fast PWM mode 7.

mode 3 uses 0xFF as top, while mode 7 uses OCR0A as top, which allows for frequency adjustment.

3. Why does the motor not spin at low duty cycles?

The average voltage is lower than the minimum voltage required to drive the motor

4. When running the motor below 100% duty cycle, there is an audible whining noise coming from the motor – especially at low duty cycles. What is the cause of the whining noise?

Back EMF from the motor. A PWM wave is a variation of a square wave, and so a tone can be heard when the current changes rapidly from 0% to 100%. The tone is from vibrations in the mechanical components vibrating.